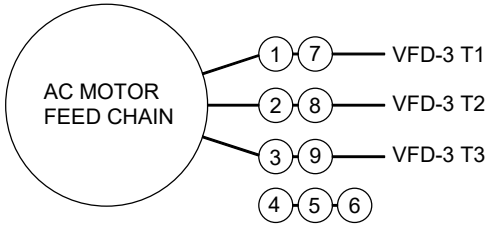
AC MOTOR
FEED CHAIN
1 7 VFD-3 T1
2 8 VFD-3 T2
3 9 VFD-3 T3
4 5 6

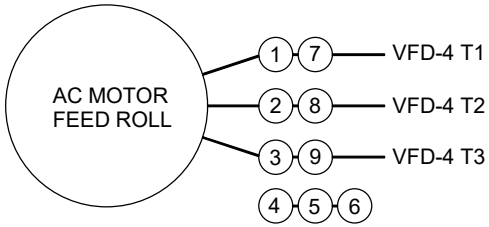
AC MOTOR
FEED ROLL
1 7 VFD-4 T1
2 8 VFD-4 T2
3 9 VFD-4 T3
4 5 6

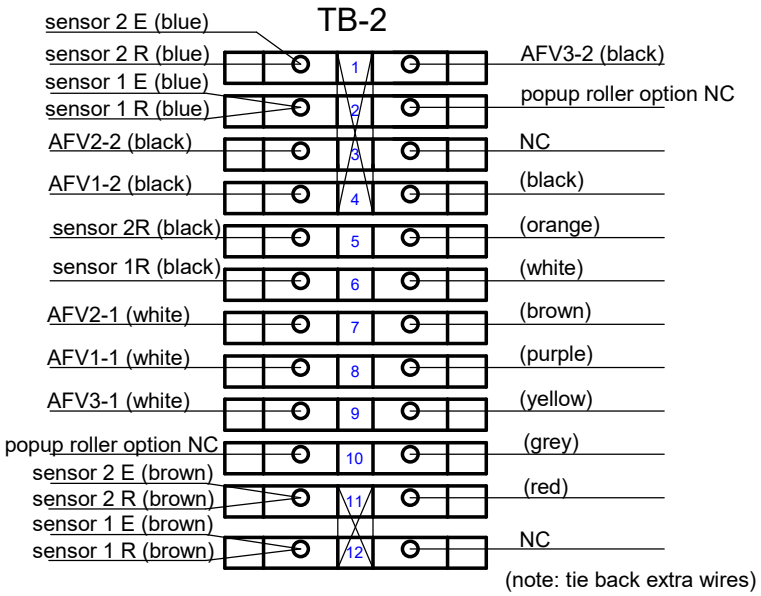
TB-2
sensor 2 E (blue)
sensor 2 R (blue)
sensor 1 E (blue)
sensor 1 R (blue)
AFV2-2 (black)
AFV1-2 (black)
sensor 2R (black)
sensor 1R (black)
AFV2-1 (white)
AFV1-1 (white)
AFV3-1 (white)
popup roller option NC
sensor 2 E (brown)
sensor 2 R (brown)
sensor 1 E (brown)
sensor 1 R (brown)
1 2 3 4 5 6 7 8 9 10 11 12
AFV3-2 (black)
popup roller option NC
NC
(black)
(orange)
(white)
(brown)
(purple)
(yellow)
(grey)
(red)
NC
(note: tie back extra wires)

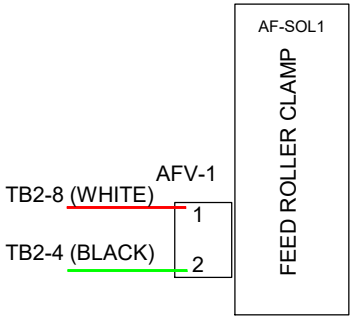
AF-SOL1
FEED ROLLER CLAMP
AFV-1
TB2-8 (WHITE)
TB2-4 (BLACK)
1
2

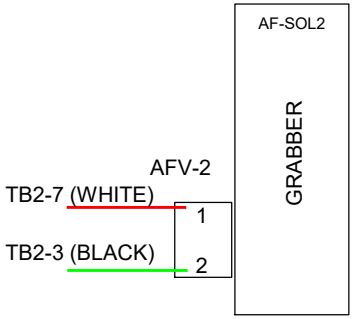
AF-SOL2
GRABBER
AFV-2
TB2-7 (WHITE)
TB2-3 (BLACK)
1
2

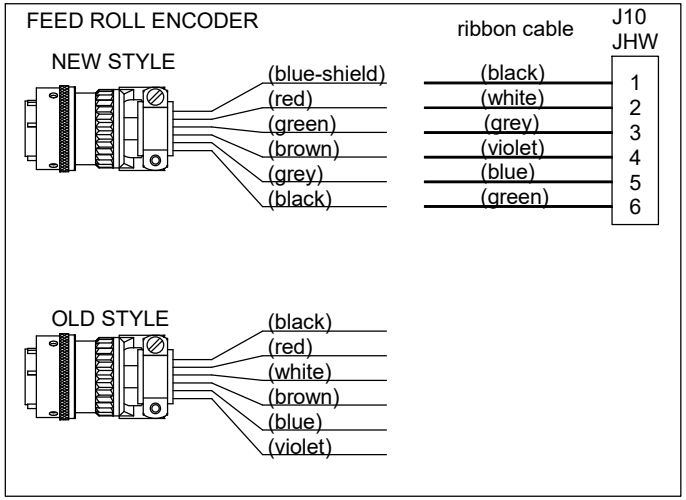
FEED ROLL ENCODER
NEW STYLE
(blue-shield)
(red)
(green)
(brown)
(grey)
(black)
ribbon cable
(black)
(white)
(grey)
(violet)
(blue)
(green)
J10
JHW
1
2
3
4
5
6
OLD STYLE
(black)
(red)
(white)
(brown)
(blue)
(violet)

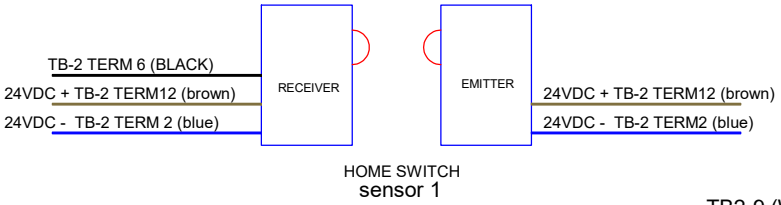
TB-2 TERM 6 (BLACK)
24VDC + TB-2 TERM12 (brown)
24VDC - TB-2 TERM 2 (blue)
RECEIVER
EMITTER
24VDC + TB-2 TERM12 (brown)
24VDC - TB-2 TERM2 (blue)
HOME SWITCH
sensor 1

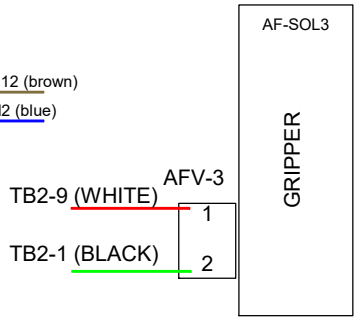
AF-SOL3
GRIPPER
AFV-3
TB2-9 (WHITE)
TB2-1 (BLACK)
1
2

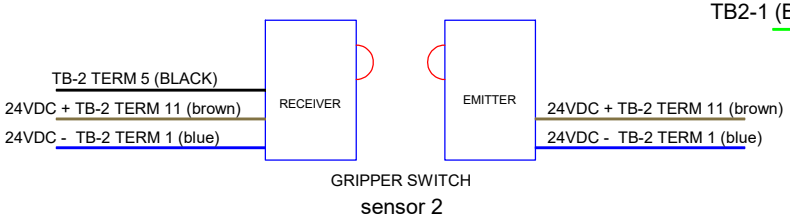
TB-2 TERM 5 (BLACK)
24VDC + TB-2 TERM 11 (brown)
24VDC - TB-2 TERM 1 (blue)
RECEIVER
EMITTER
24VDC + TB-2 TERM 11 (brown)
24VDC - TB-2 TERM 1 (blue)
GRIPPER SWITCH
sensor 2